1. STRUCTURE

NO.	ITEM	DESCRIPTION
1.1	Main Material	Zinc Oxide
1.2	End termination	Ag/Ni/Sn
1.3	Packaging	Reel
1.4	Complies with Standard	IEC61000-4-5
1.5	Complies with RoHS Standard	Yes
1.6	Lead content	< 1000ppm
1.7	Reflow solder profile temperature (Recommend)	250 ℃
1.8	Dimensions	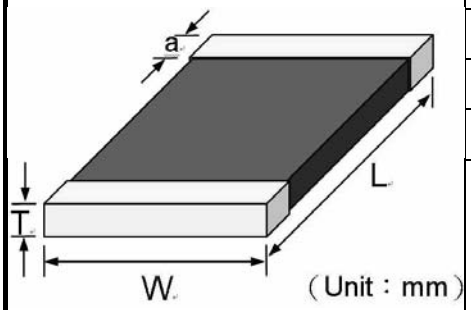

L	3.20 ± 0.20
W	1.60 ± 0.15
T(max.)	1.50
a	0.5 ± 0.2

2. ELECTRICAL CHARACTERISTICS

N0.	ITEM	PERFORMANCE	TEST METHODS
2.0	Standard Conditions		Unless otherwise specified, all tests are made under environmental conditions as given below: Temperature: 5~35°C Relative humidity: 45~85 % RH
2.1	Maximum Allowable Voltage	AC : ***(1)** V_{rms} DC : ***(1)** V	Maximum continuous sine wave(RMS) or DC voltage which may be applied.
2.2	Varistor Voltage	$V_{0.1mA}$: ***(1)** V	Voltage across the varistor measured at C_{mA} DC.
2.3	Varistor Voltage Temperature Coefficient	0 ~ –0.05 %/°C	$\frac{V_{cmA\,at\,85℃} - V_{cmA\,at\,25℃}}{V_{cmA\,at\,25℃}} \times \frac{1}{60} \times 100$
2.4	Max. Clamping Voltage	***(1)** V at **1** A	Peak voltage across the varistor with a specified peak impulse current of 8x20μs waveform.
2.5	Withstanding Surge Current	***(1)** A	The max. current within the varistor voltage change of less than ±10% when one impulse current (8x20μs) applied.
2.6	Energy	***(1)** Joule	The max. energy absorbed with a varistor voltage change of less than ±10% when one impulse (10x1000μs) is applied.
2.7	Response time	T_{rise} < 1 nS	
2.8	Leakage current	I_{VV} <50μA	at V_{1mA}×80%
		I_{VV} <200μA	at V_{1mA}×80% (After Reliability Test)
2.9	Capacitance	***(1)** pF.	Capacitance shall be measured at 1 kHz±10%,1 Vrms max.(1 MHz below 100 pF) 0V bias and 20±2℃

***(1) See table 2.1 Electrical Characteristics**

Table 2.1 Electrical Characteristics

Part Number	Maximum Allowable Voltage		Varistor Voltage	Max. Clamping Voltage	Withstanding Surge Current	**Energy**	**Capacitance**
Symbol	AC	DC	V（1mA）	$V_{(*2)}$	$A_{(*3)}$	J	$PF_{(*1)}$(kHz)
1206M080KRR	4	5.5	8 (7.5~10.5)	＜20	100	＞0.2	3100
1206M180KRR	11	14	18 (15.3~20.7)	＜30	100	＞0.3	800
1206M240KRR	14	18	24(21.6~26.7)	＜38	100	＞0.3	620
1206M270KRR	17	22	27(24.3~29.7)	＜44	100	＞0.4	700
1206M330KRR	20	26	33(29.7~36.3)	＜54	100	＞0.5	480
1206M390KRR	25	30	39(35.1~42.9)	＜65	100	＞0.6	400
1206M470KRR	30	38	47(42.3~51.7)	＜77	100	＞0.7	260
1206M560KRR	35	45	56(50.4~61.4)	＜90	100	＞0.8	230
1206M680KRR	40	56	68(61.2~74.8)	＜110	100	＞1.0	200
1206M820KRR	50	65	82(73.8~90.2)	＜135	100	＞0.5	175
1206M101KRR	60	85	100(90~110)	＜165	100	＞0.6	150

3. ENVIRONMENTAL CHARACTERISTICS

No.	Characteristic	Test method and description			
3.1	High Temperature Storage	The specimen shall be subjected to 150 ± 2℃ for 1000 ± 12 hours in a thermostatic bath without load and then stored at room temperature and humidity for 1 to 2 hours. The change of varistor voltage shall be within 10% .			
3.2	Temperature Cycle	The temperature cycle of specified temperature shall be repeated five times and then stored at room temperature and humidity for one or two hours. The change of varistor voltage shall be within 10% and mechanical damage shall be	Step	Temperature	Period
			1	-40±3℃	30Min±3
			2	Room Temperature	1~2 hours
			3	125±2℃	30Min±3
			4	Room Temperature	1~2 hours
3.3	High Temperature Load	After being continuously applied the maximum allowable voltage at 85 ± 2℃ For 1000± 2 hours, the specimen shall be stored at room temperature and humidity for one or two hours, the change of varistor voltage shall be within 10% .			
3.4	Damp Heat Load/ Humidity Load	The specimen should be subjected to 40 ± 2℃, 90 to 95%RH environment, and the maximum allowable voltage applied for 1000 hours, then stored at room temperature and humidity for one or two hours. The change of varistor voltage shall be within 10%.			
3.5	Low Temperature Storage	The specimen should be subjected to -40 ± 2℃, without load for 500 hours and then stored at room temperature for one or two hours. The change of varistor voltage shall be within 10%			

4. TECHNICAL TERM

No.	Item	Specifications	Description
4.1	Operating Temperature Range	-40℃ to +85℃	Operating temperature range without derating.
4.2	Storage Temperature Range	-40℃ to +125℃	Storage temperature range without voltage applied.
4.3	Transient Response Time	< 50 ns	Time lag between application of surge and varistor's "turn-on" conduction action.

5. SOLDERING RECOMMENDATIONS

5.1 Recommended solder pad layout

A	B	C	D
1.8~2.5	4.2~5.2	1.2~1.8	1.2~1.8
（Unit：mm）			

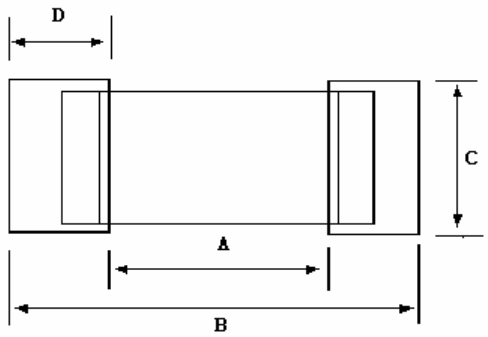

5.2 The SIR test of the solder paste shall be done（Based on JIS-Z-3284）

5.3 Steel plate and foot distance printing

Foot distance printing (mm)	Steel Plate thickness (mm)
> 0.65mm	0.18mm
0.65mm~0.5mm	0.15mm
0.50mm~0.40mm	0.12mm
<=0.40 mm	0.10mm

5.4 IR Soldering

Rapid heating, partial heating or rapid cooling will easily cause defect of the component. So preheating and gradual cooling process is suggested. IR soldering has the highest yields due to controlled heating rates and solder liquids times. Make sure that the element is not 2.4 The IR reflow and temperature of Soldering for Pb Free subjected to a thermal gradient steeper than 4 degrees per second. 2 degrees per second is the ideal gradient. During the soldering process, pre- heating to within 100 degrees of the solders peak temperature is essential to minimize thermal shock.

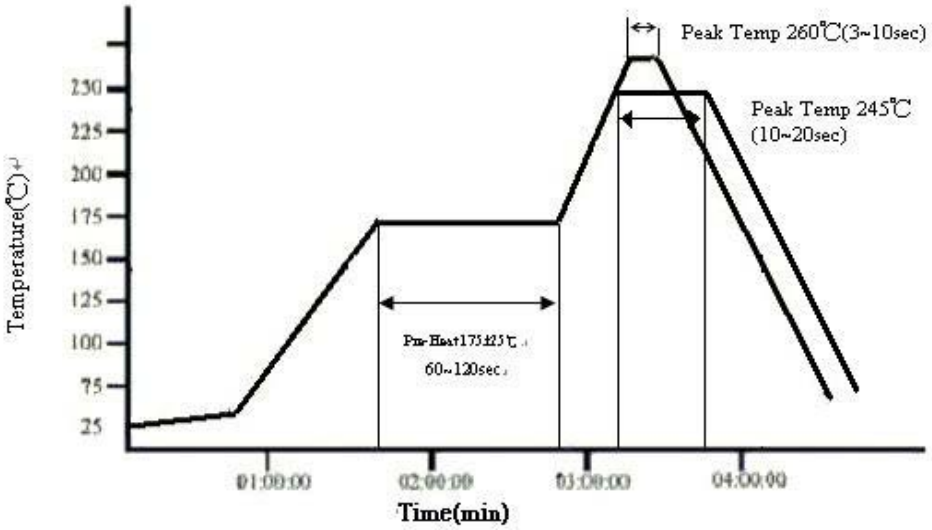

☆ **IR reflow Pb Free Process suggestion profile**

(1) The solder recommend is Sn96.5/Ag 3.5 of 120 to 150μm

(2) Ramp-up rate (217℃ to Peak) + 3℃/second max

(3) Temp. maintain at 175 +/-25℃ 180 seconds max

(4) Temp. maintain above 217 ℃ 60-150 seconds

(5) Peak temperature range 245℃ +20℃/ -10 ℃ time within 5 ℃of actually peak temperature (tp) 10~20 seconds

(6) Ramp down rate +6 ℃/second max.

※Perform adequate test in advance as the reflow temperature profile will vary according to the conditions of the manufacturing process, and the specification of the reflow furnace.

5.5 Resistance to soldering heat-High Temperature Resistance:260℃,10sec-3times.

5.6 Hand Soldering

In hand soldering of the Varistors. Large temperature gradient between preheated the Varistors and the tip of soldering iron may cause electrical failures and mechanical damages such as crackings or breakings of the devices. The soldering shall be carefully controlled and carried out so that the temperature gradient is kept minimum with following recommended conditions for hand soldering.

5.6.1 Recommended Soldering Condition 1

（1） Solder ：

0.12~0.18mm Thread solder (Sn96.5:Ag3.5) with soldering flux in the core. Rosin-based and non-activated flux is recommended.

（2） Preheating

The Varistors shall be preheated so that Temperature Gradient between the devices and the tip of soldering iron is 150℃ or below.

（3）Soldering Iron

Rated Power of 20w max with 3mm soldering tip in diameter.

Temperature of soldering iron tip 380℃max,3-5sec (The required amount of solder shall be melted in advance on the soldering tip.)

（4）Cooling

After soldering. The Varistors shall be cooled gradually at room ambient temperature.

5.6.2 Recommended Soldering Condition 2（Without preheating）

（1）Solder iron tip shall not directly touch to ceramic dielectrics.

（2）Solder iron tip shall be fully preheated before soldering while soldering iron tip to the external electrode of Varistors.

5.7 Post Soldering Cleaning

5.7.1 Residues of corrosive soldering fluxes on the PC board after cleaning may greatly have influences on the electrical characteristic and the reliability (such as humidity resistance)of the Varistors which have been mounted on the board. It shall be confirmed that the characteristic and the reliability of the devices are not affected by the applied cleaning conditions.

5.7.2. When an ultrasonic cleaning is applied to the mounted Varistors on PC Boards. Following conditions are recommended for preventing failures or damages of the devices due to the large vibration energy and the resonance caused by the ultrasonic waves.

（1）Frequency 29MHz max

（2）Radiated Power 20w/lithr max

（3）Period 5minuets max

6. PACKAGING SPECIFICATION

6.1 Carrier tape and transparent cover tape should be heat-sealed to carry the products, and the reel should be used to reel the carrier tape.

6.2 The adhesion of the heat-sealed cover tape shall be 40 +20/ -15grams.

6.3 Both the head and the end portion of the taping shall be empty for reel package and SMT auto-pickup machine. And a normal paper tape shall be connected in the head of taping for the operator to handle

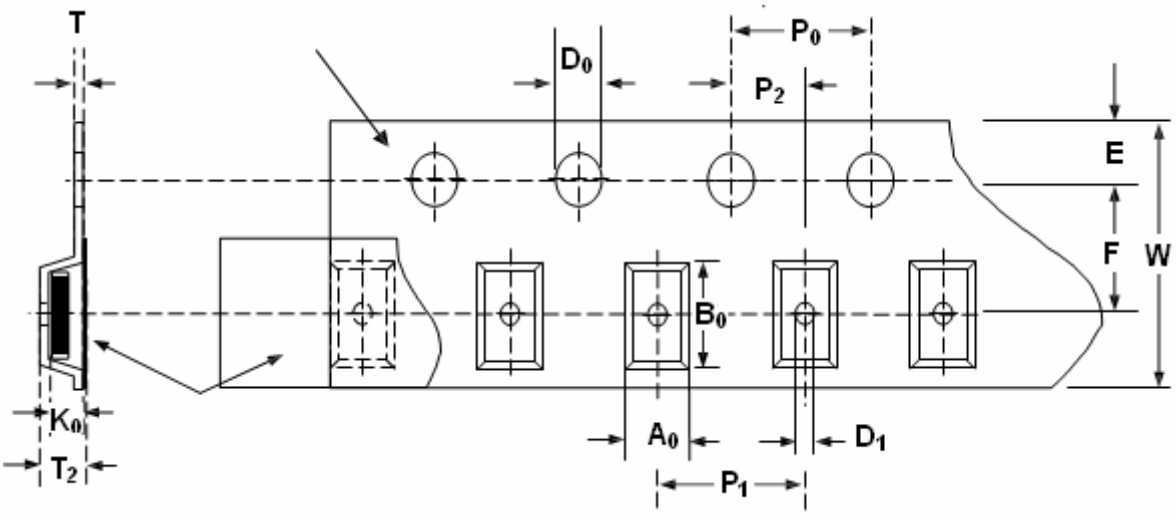

Symbol	A_0 ±0.10	B_0 ±0.10	K_0 ±0.10	T ±0.05	T_2 ±0.05	D_0 +0.10 -0.00	D_1 ±0.05	P_1 ±0.10	P_2 ±0.05	P_0 ±0.05	W ±0.20	E ±0.10	F ±0.05
mm	1.88	3.50	1.27	0.22	1.49	1.50	1.00	4.00	2.00	4.00	8.00	1.75	3.50

7. REEL DIMENSION

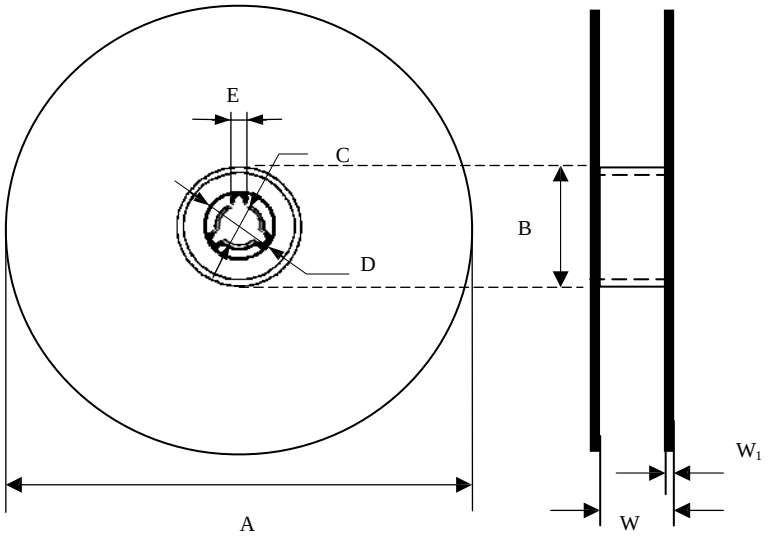

Symbol	A	B	C	D	E	W	W_1
Unit(mm)	178±1	60±0.5	13±0.2	21±0.2	2.0±0.5	9±0.5	1.5±0.15

Standard packaging：1000 pcs/Reel.